YTPH

Stoker Hot Air Apparatus

yağmur teknik

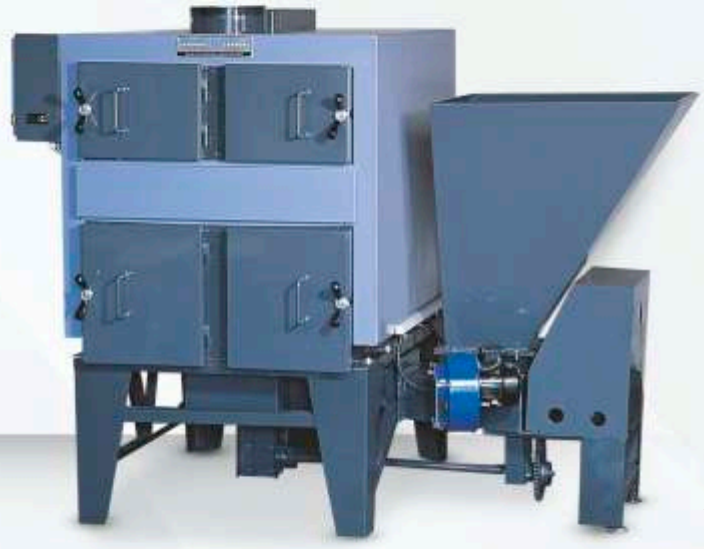

Stoker Hot Air Apparatus

This type of boilers are operated using fuels such as bagasse, hazelnut coal and hazelnut shells which have high calorie value and are economical.

It delivers up to 35% fuel economy by its down-feed system; amount of waste materials is reduced by 30%.

These are used for heating large volumes such as pens, greenhouses and factories.

It has a high and efficient air exchange coefficient.

The digital control unit ensures electric and fuel economy.

Fans used for the boilers are valve adjusted.

Our YTPH type boilers which offer high efficiency and capacity are a good choice for heating purposes in all areas.

AXIAL FAN

RADIAL FAN

Technical Features

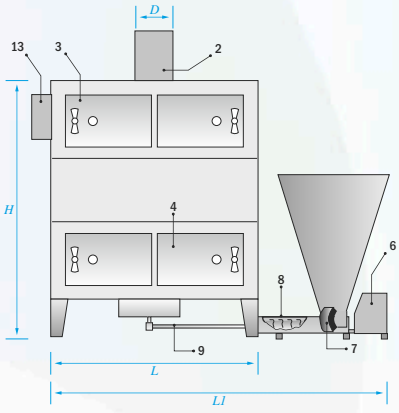

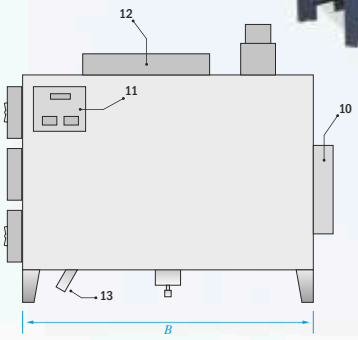

Part Descriptions

1) Boiler
2) Chimney
3) Duman Kapağı
4) Combustion Chamber Hatch
5) Bunker
6) Reducer Group
7) Fan
8) Elevator (Spiral)
9) Mixer Shaft
10) Arka Fan
11) Control panel
12) Sıcak Hava Çıkışı
13) Kül Boşaltma

Model		YTPH 100	YTPH 150	YTPH 200	YTPH 250	YTPH 300	YTPH 350	YTPH 400	YTPH 500	YTPH 600	YTPH 800	YTPH 1000
Capacity	Kcal/h	100.000	150.000	200.000	250.000	300.000	350.000	400.000	500.000	600.000	800.000	1.000.000
Fan Power (Axial) 380 V - 3000 d/d	Hp	3	4		5,5				10	20	30	40
Fan Flux (Axial) ~	m^3/h		12.000		18.000			40.000	-			
Hava Outlet Flux (Axial) ~	m^3/h		8.000		12.000			26.650	-			
Fan Power(Radial) 380 V - 1400 d/d	Hp	4		5,5	7,5				10	m^3 e göre debi seçimi		
Fan Flux (Radial) ~	m^3/h	20.000		24.000	27.000				42.000	m^3 e göre debi seçimi		
Air Outlet Flux (Radial) ~	m^3/h	10.000		12.000	13.500				21.000	m^3 e göre debi seçimi		
Air Outlet Temp.	°C	120										
Fuel		Max. Ø20 mm Coal and Dry Pomace										
Weight	Kg	770	1050	1060	1090	1350	1486	1627	1720	2058	2200	2320
D (Chimney)	mm	250			300 x 250			300 x 450		400 x 500	500 x 700	
H (Height)	mm	1590	1970		2030	2100	2150	2080	2440		2050	2250
B (Depth)	mm	1350		1470	1350	1650	1670	1810		2080	2200	2470
L (Boiler Length)	mm	1100				1200	1250	1450		1470	2000	2100
L1 (Stoker Length)	mm	1800		1900		2000	2020	2300				2850